Via monte Nero, 40/B – 21049 TRADATE (VA) ITALY Phone: +39 (0)331841070 - e-mail:datexel@datexel.it - www.datexel.it

Isolated two wire transmitter programmable by PC

DAT 1061

FEATURES

- **Configurable input for RTD, mV, Resistance and Potentiometer**
- **1500 Vac Galvanic isolation**
- **4 ÷ 20 mA configurable output on current loop with damping function**
- **Configurable by Personal Computer by cable CVPROG**
- **High accuracy**
- **On-field reconfigurable**
- **EMC compliant – CE and UKCA mark**
- **DIN B in-head mounting with option for DIN rail in compliance with EN 50022 (DIN RAIL Option)**

GENERAL DESCRIPTION

The isolated transmitter DAT1061 is able to execute many functions such as : measure and linearisation of the temperature characteristic of RTDs sensors, conversion of a linear resistance variation, conversion of a voltage signal even coming from a potentiometer connected on its input. The measured values are converted in a 4÷20 mA current signal. The device guarantees high accuracy and performance stability both in time and in temperature. The programming of the device is made by a Personal Computer using the software DATAPRO and the cable CVPROG, both developed and provided by DATEXEL. By DATAPRO , that runs under the operative system "Windows™", it is possible to configure the transmitter to interface it with the most used sensors . In case of sensors with a no-standard output characteristic, it is possible to execute, via software, a "Custom" linearisation (per step) to obtain an output linearised signal .
For Resistance and RTDs sensors it is possible to program the cable compensation with 3 or 4 wires.
It is possible to set the minimum and maximum values of input and output ranges in any point of the scale, keeping the minimum span shown in the table below.
Moreover it is available the option of alarm for signal interruption (burn-out) that allows to set the output value as high or low out of scale .
On the device is provided the function “Damping” that allows the user to set a programmable filter up to 30 seconds to reduce eventual sudden variations of the input signal.
The 1500 Vac isolation between input and power supply/output eliminates the effects of all ground loops eventually existing and allows the use of the transmitter in heavy environmental conditions found in industrial applications.
It is housed in a self-extinguish plastic enclosure for DIN B in-head mounting. By proper kit it is possible to mount the device on DIN rail also.

USER INSTRUCTIONS

The input connections must be made as shown in the sections “Output/Power supply connections” and "Input connections".
To configure, calibrate and install the transmitter refer to sections "Configuration DAT1061" and “Installation Instructions”.

TECHNICAL SPECIFICATIONS (Typical at 25 °C and in nominal conditions)

INPUT

Input type	Min	Max	Min Span
Voltage			
mV	-100 mV	+700 mV	2 mV
RTD(*) 2,3,4 wires			
Pt100	-200°C	850°C	50°C
Pt1000	-200°C	200°C	50°C
Ni100	-60°C	180°C	50°C
Ni1000	-60°C	150°C	50°C
Potentiometer			
(nominal value)	0 Ω	200 Ω	10%
	200 Ω	500 Ω	10%
	0.5 KΩ	50 KΩ	10%
RES. 2,3,4 wires			
Low	0 Ω	300 Ω	10 Ω
High	0 Ω	2000 Ω	200 Ω

Input calibration (1)

RTD	the higher of ±0.1% f.s. & ±0.2°C
Res. Low	the higher of ±0.1% f.s. & ±0.15 Ω
Res. High	the higher of ±0.2% f.s. & ±1 Ω
mV	the higher of ±0.1% f.s. & ±10 uV
Input Impedance	
mV	>= 10 MΩ
Linearity (1)	
RTD	± 0.1 % f.s.
Line resistance influence (1)	
mV	<=0.8 uV/Ohm
RTD 3 wires	0.05%/Ω (50 Ω max balanced)
RTD 4 wires	0.005%/Ω (100 Ω max balanced)
RTD excitation current	
Typical	0.350 mA

OUTPUT

Output type	Min	Max	Min Span
Direct current	4 mA	20 mA	4 mA
Reverse current	20 mA	4 mA	4 mA

Output calibration	
Current	± 7 uA
Thermal drift (1)	
Full scale	± 0.01% / °C
Burn-out values	
Max. output value	about 20.5 mA
Min. output value	about 3.8 mA
Max. fault value	about 21.6 mA
Min. fault value	about 3.5 mA
Damping time constant	
Selectable	from 0.3 to 30 s.
Value 0:	function not active.
Response time (10÷ 90%)	about 400 ms

Load characteristic - Rload (maximum load value on current loop per power supply value)

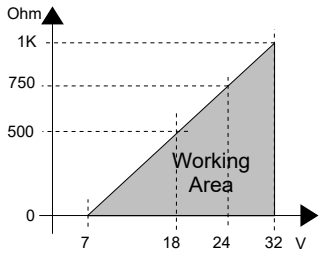

(1) referred to input Span (difference between max. and min. values)
(*) For the temperature sensors it is possible to set the measurement also in °F

GENERAL SPECIFICATIONS

Power supply voltage	7 .. 32 Vdc
Reverse polarity protection	60 Vdc max
ISOLATION	
Input – Output/Pow.supply	1500 Vac, 50 Hz,1 min.
ENVIRONMENTAL CONDITIONS	
Operative temperature	-40°C .. +85°C
Storage temperature	-40°C .. +85°C
Humidity (not condensing)	0 .. 90 %
Maximum Altitude	2000 m slm
Installation	Indoor
Category of Installation	II
Pollution Degree	2
MECHANICAL SPECIFICATIONS	
Material	PC + ABS V0
Mounting	DIN B in-head
Wiring	Wire section max 1.5 mm^2 AWG 16
Weight	about 50 g.
Dimensions	∅ = 43 mm ; H = 24 mm
IP Code	Enclosure: IP40 Terminals : IP10
CERTIFICATIONS	
EMC (for the Industrial Environments)	
Immunity	EN 61000-6-2
Emission	EN 61000-6-4
UKCA (ref S.I. 2016 N°1091)	
Immunity	BS EN 61000-6-2
Emission	BS EN 61000-6-4

CONFIGURATION DAT 1061

Notice: before to execute the next operations, check that the drivers of the cable CVPROG in use have been previously installed in the Personal Computer.

1) Remove the protection plastic cap.
2) Connect the two plugs of cable CVPROG to the Personal Computer (USB plug) and to the device (uUSB plug) .
3) Run the software DATAPRO. Set the COM port assigned to the CVPROG cable by the Operative System.
4) Set the parameters of configuration .
5) Program the device.

- CALIBRATION CONTROL

With software running and device powered:

1) Connect on the input a calibrator setted with minimum and maximum values referred to the electric signal or to the temperature sensor to measure.
2) Set the calibrator at the minimum value.
3) Verify that the device provides on output the minimum setted value.
4) Set the calibrator at the maximum value.
5) Verify that the device provides on output the maximum setted value.
6) In case of regulation of value obtained in the step 3 and 5, use the ZERO and SPAN regulators of software.
The variation introduced from these regulators must be calculated as percentage of the input range .
7) Program the device with the new parameters .

CONFIGURATION DAT1061 BY CVPROG CABLE

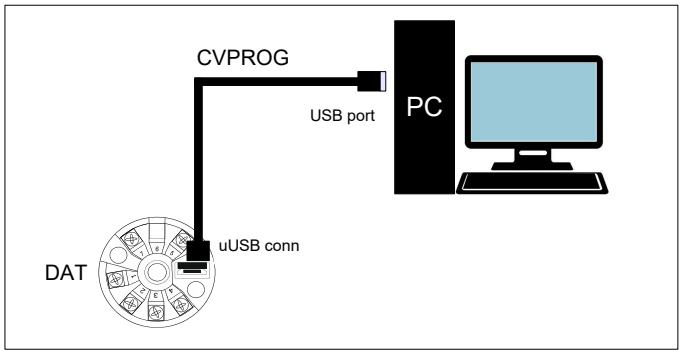

DIN B in-head mounting

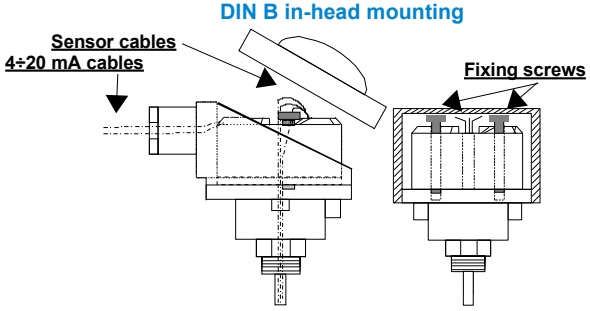

DIN rail mounting (DIN RAIL Option)

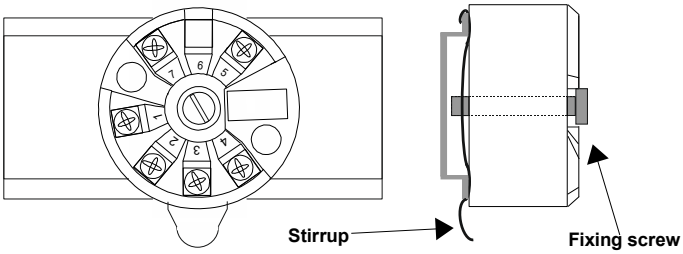

ISOLATION STRUCTURE

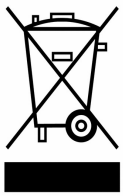

The symbol reported on the product indicates that the product itself must not be considered as a domestic waste.
It must be brought to the authorized recycle plant for the recycling of electrical and electronic waste.
For more information contact the proper office in the user's city , the service for the waste treatment or the supplier from which the product has been purchased.

INSTALLATION INSTRUCTIONS

The device DAT1061 is suitable for direct DIN B in-head mounting. The transmitter must be fixed inside the probe by the proper kit.
By apposite stirrup, provided on request, it is possible to mount the device on DIN rail in compliance with EN-50022. It is necessary to install the device in a place without vibrations; avoid to routing conductors near power signal cables .

DAT1061 WIRING

INPUT CONNECTIONS

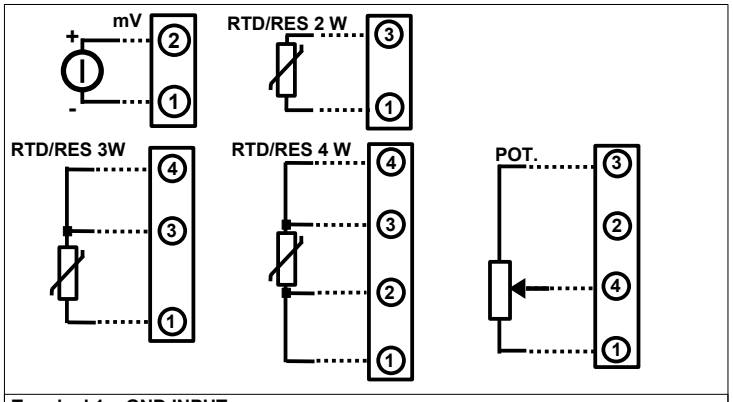

Terminal 1 = GND INPUT

OUTPUT/POWER SUPPLY CONNECTIONS

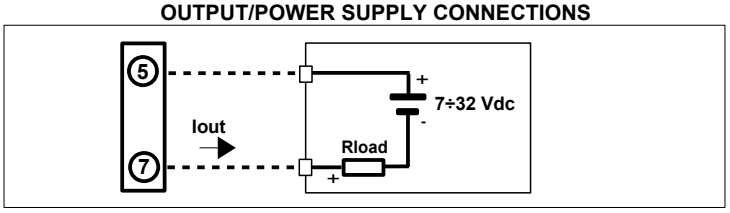

DAMPING FUNCTION

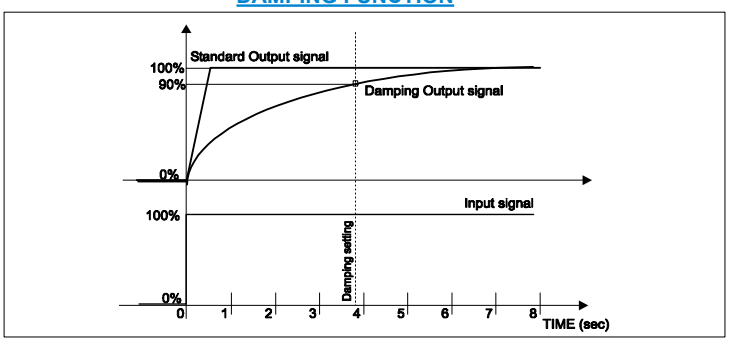

Example with damping = 3.9 seconds

MECHANICAL DIMENSIONS (mm)

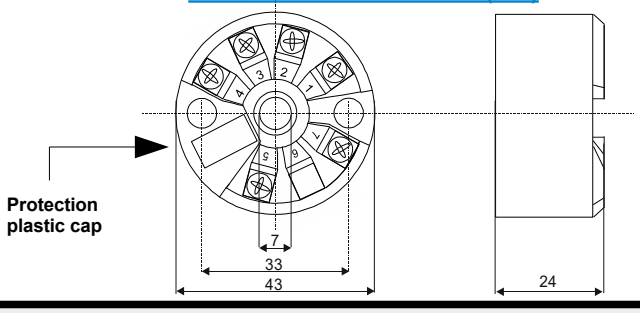

HOW TO ORDER

The DAT1061 is provided as requested on the Customer's order.
Refer to the section "Technical specification" to determine input and output ranges.
The mounting kit for DIN rail is provided **only on request** with code DIN RAIL.
In case of the configuration is not specified, the parameters must be set by the user.

ORDER CODE EXAMPLE:

DAT 1061 / Pt100 / 3 wires / 0 ÷ 200 °C / S.L. / 4 ÷ 20 mA / Burn-out up

- Input type
- Sensor options : RTD/RES:2,3,4 wires
- Input range
- (*) Linearisation options: S.L.: standard linearisation. N.L.: no linearisation. C.L.: linearisation by step (Custom): specify input curve
- Output range
- High or low Out of scale

ED.04.12 REV.06

Datexel reserves its rights to modify totally or in part the characteristics of its products without warning at any time .